Part		Part Name	Quantity
1	Mount For Splitter Cable	(Top Bumper Left/Right)	2
2	Auxiliary Cooler Bracket	(Left/Right)	2
3	Mount For Splitter Cable	(Outside Left/Right)	2
4	Deformation Panel	(Left/Right)	2
5	Mount For Deformation Element	(Left/Right)	2
6	Splitter Tension Rope	(Outside)	2
7	Splitter Tension Rope	(Inside)	3
8	Mount Ring For Center Splitter Cable		1
9	Mount For Splitter Cable	(Middle Splitter)	3

Photo of parts with components labeled according to part number in table above

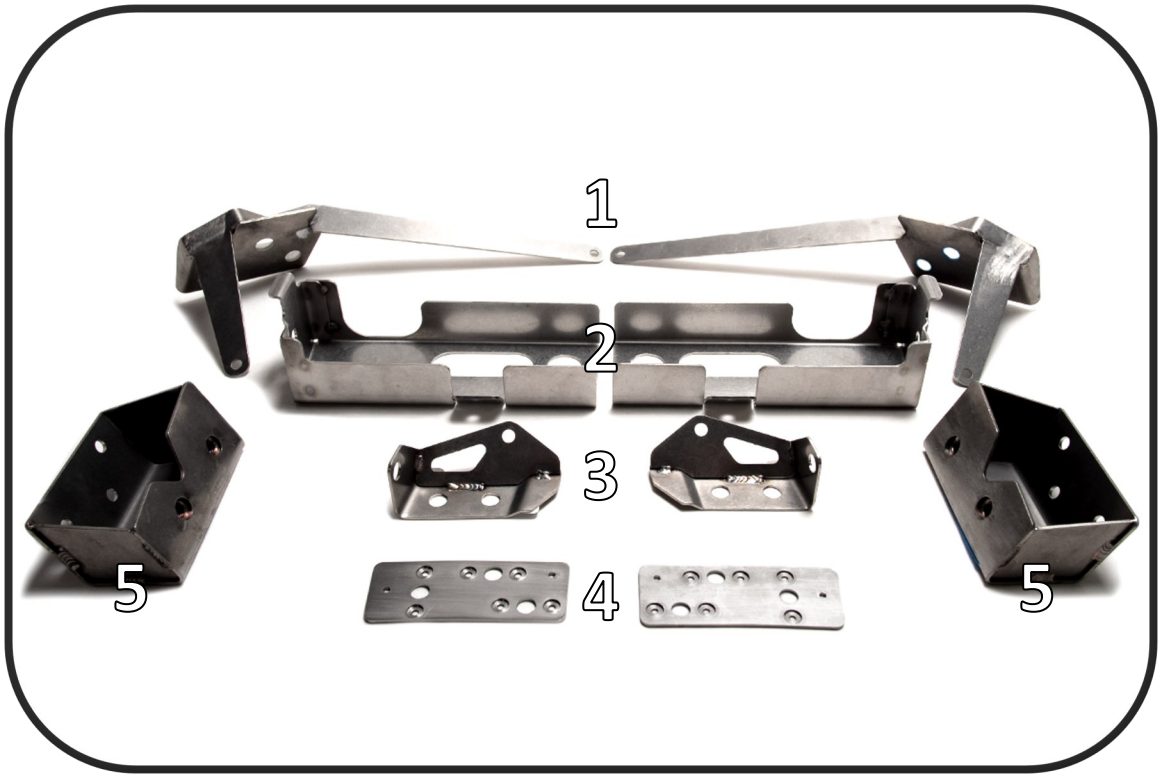

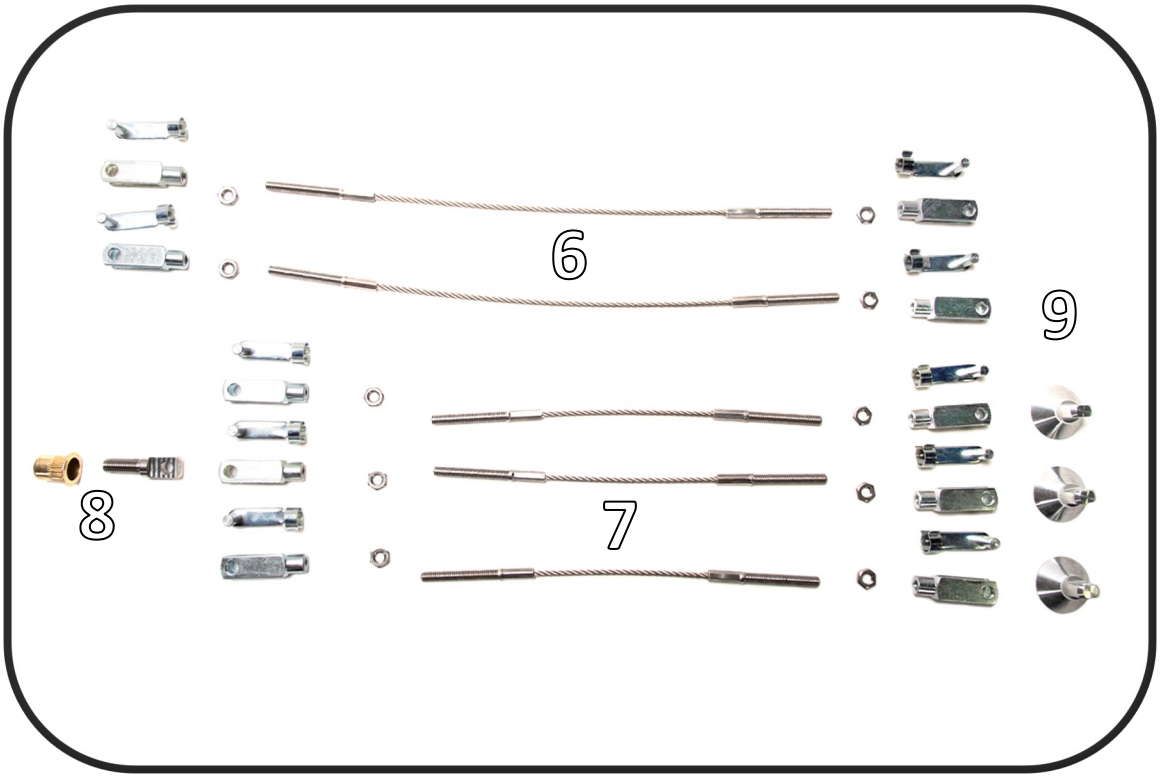
6
9
8
7

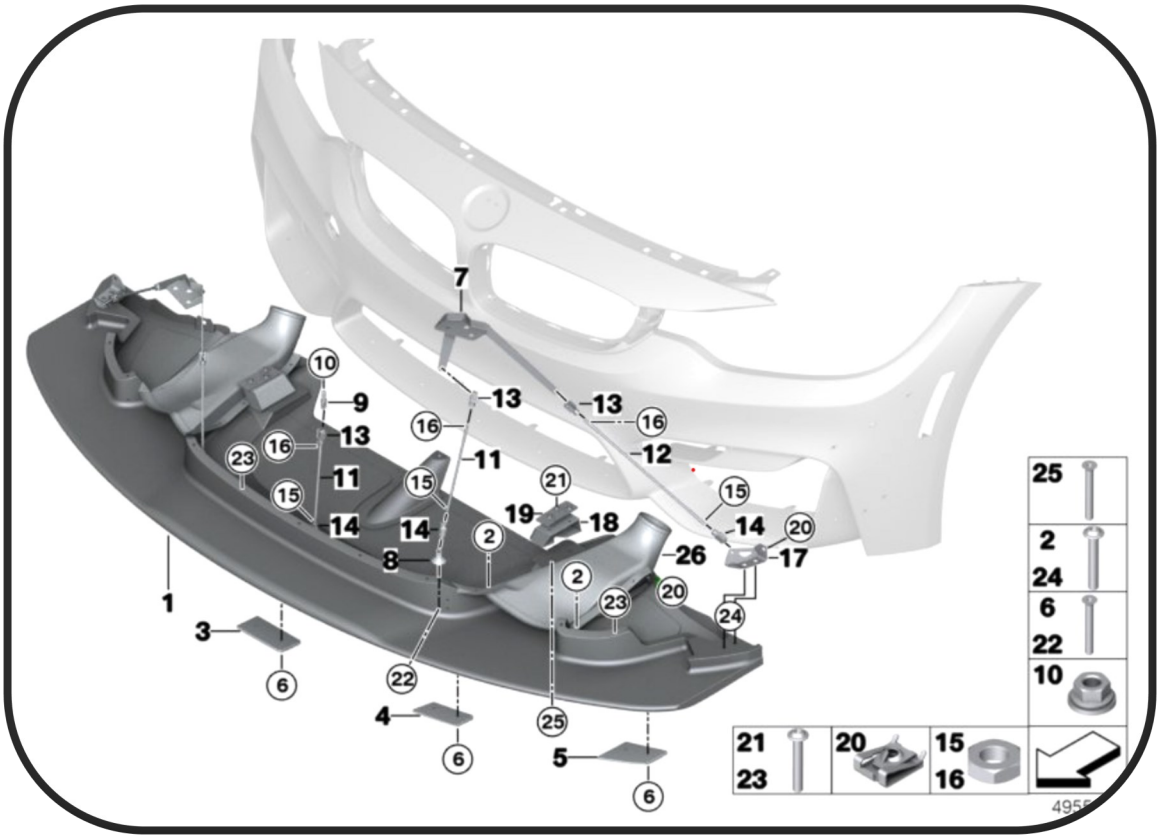
7
10
9
13
16
23
11
15
14
8
2
21
19
18
26
20
24
17
12
1
3
6
22
4
25
5
25
2
24
6
22
10
21
23
20
15
16

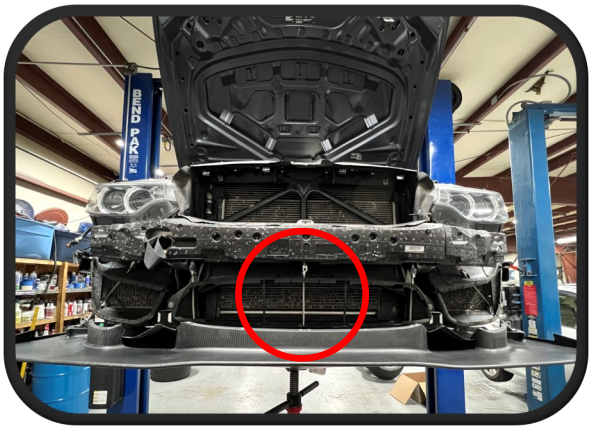

1

- Start by installing the mounting points for the tension ropes onto the chassis.
- The center tension rope is installed on the bumper mount. Drill a hole in the mount for the rivet nut and crimp the rivet nut.



- Install the M8 mounting ring into rivet nut for the center cable attachment point.

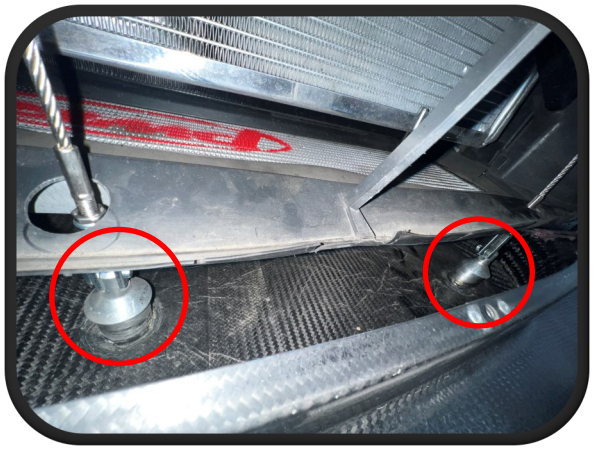

- Install the center tension rope mounts to the splitter.
- Drill tension cable pass through holes into the radiator ducting.

2





- The outer tension ropes are attached to a bracket mounted below the headlights. The ends of the bracket extend down below the bumper mount.

3

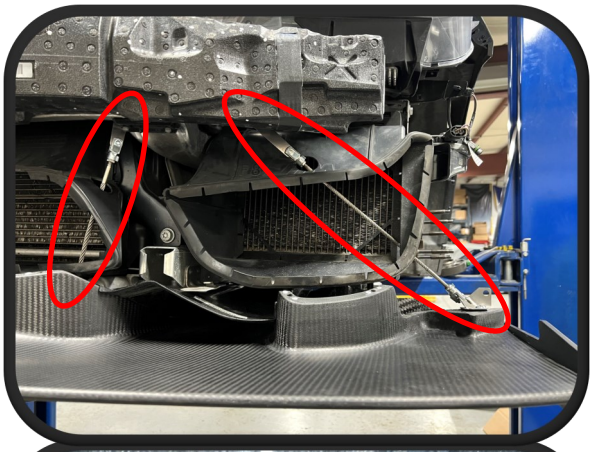

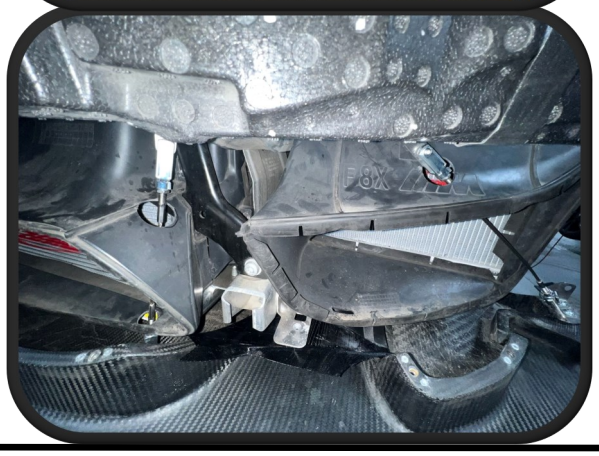

- Drill pass through holes in the cooler ducting to allow the tension ropes to pass though.

- Install new auxiliary cooler brackets. This is done to gain clearance for the brake cooling ducts.

4

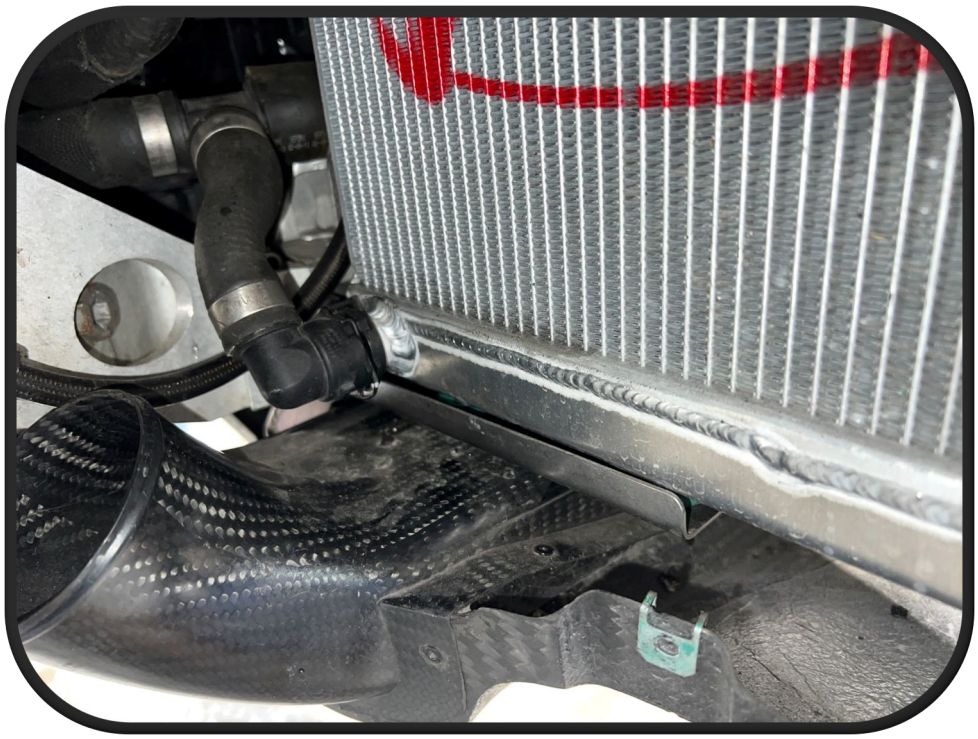

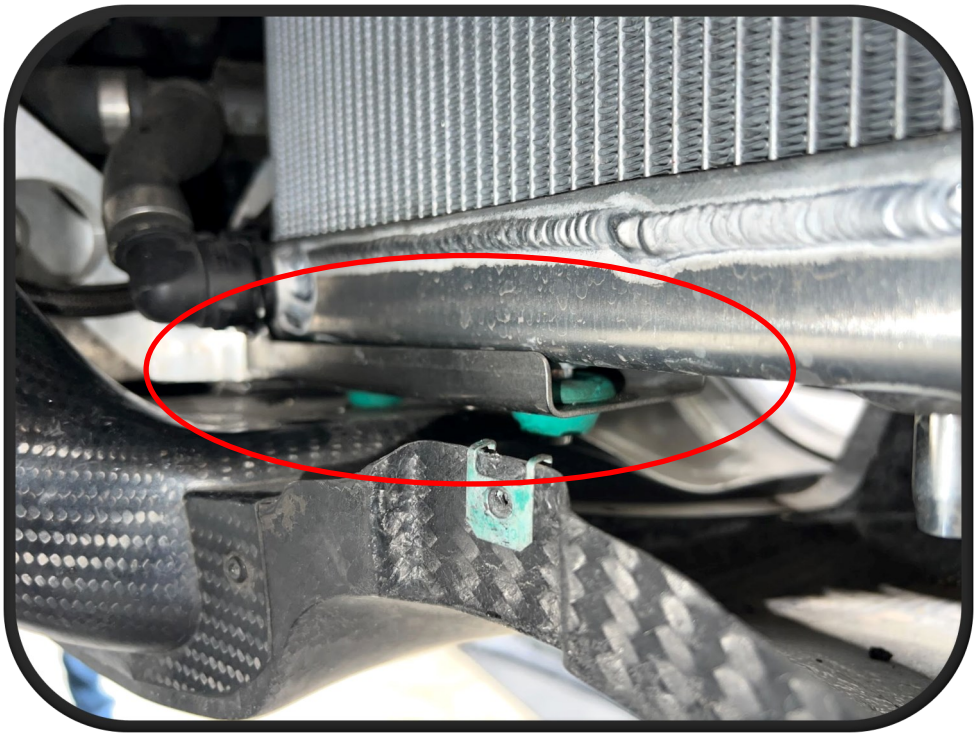

5

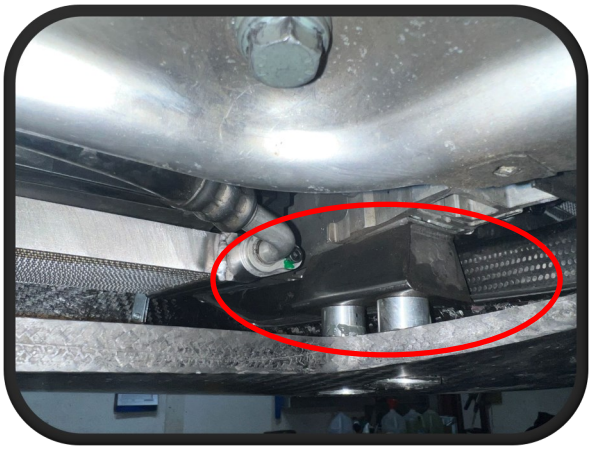



- Install the deformation elements. These mount next to the brake duct inlets on the splitter.

  Note : When drilling out rivet nuts the drill can open up the factory holes and create some play in the mounting location.

  Measure the hole spacing on the splitter and translate this to the mounting locations to keep the mounting point spacing correct.

6



- Install the outside tension rope mount to splitter noting the orientation shown in the photo.

7

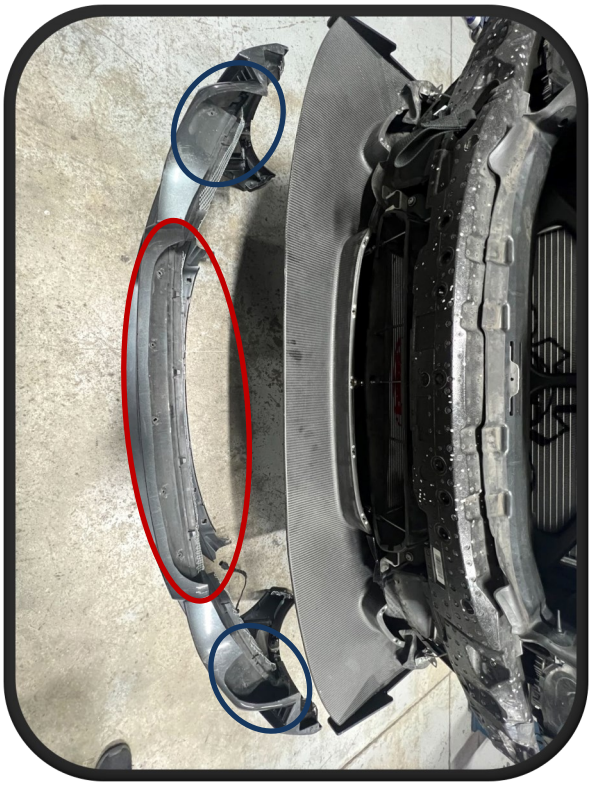

- Trim the bumper to fit around the splitter.

  Note: Bumper is sitting upside down in photos to show trimming next to spitter features.

- A template for trimming the bumper is included at the end of this document.

8



- Transfer mounting locations from the splitter onto the bumper and drill holes for hardware to attach the bumper.

9



- Mount the main body of the splitter to the chassis. This is done with 4 bolts that run through the splitter into the deformation elements mounted to the chassis.

- Once the splitter is mounted, double check clearance between auxiliary coolers and brake cooling ducts.

10



- Adjust the tension ropes until taught and install clevis pin clips. This will finish securing the splitter to the chassis.

Template for trimming the center of the bumper - 1 of 2

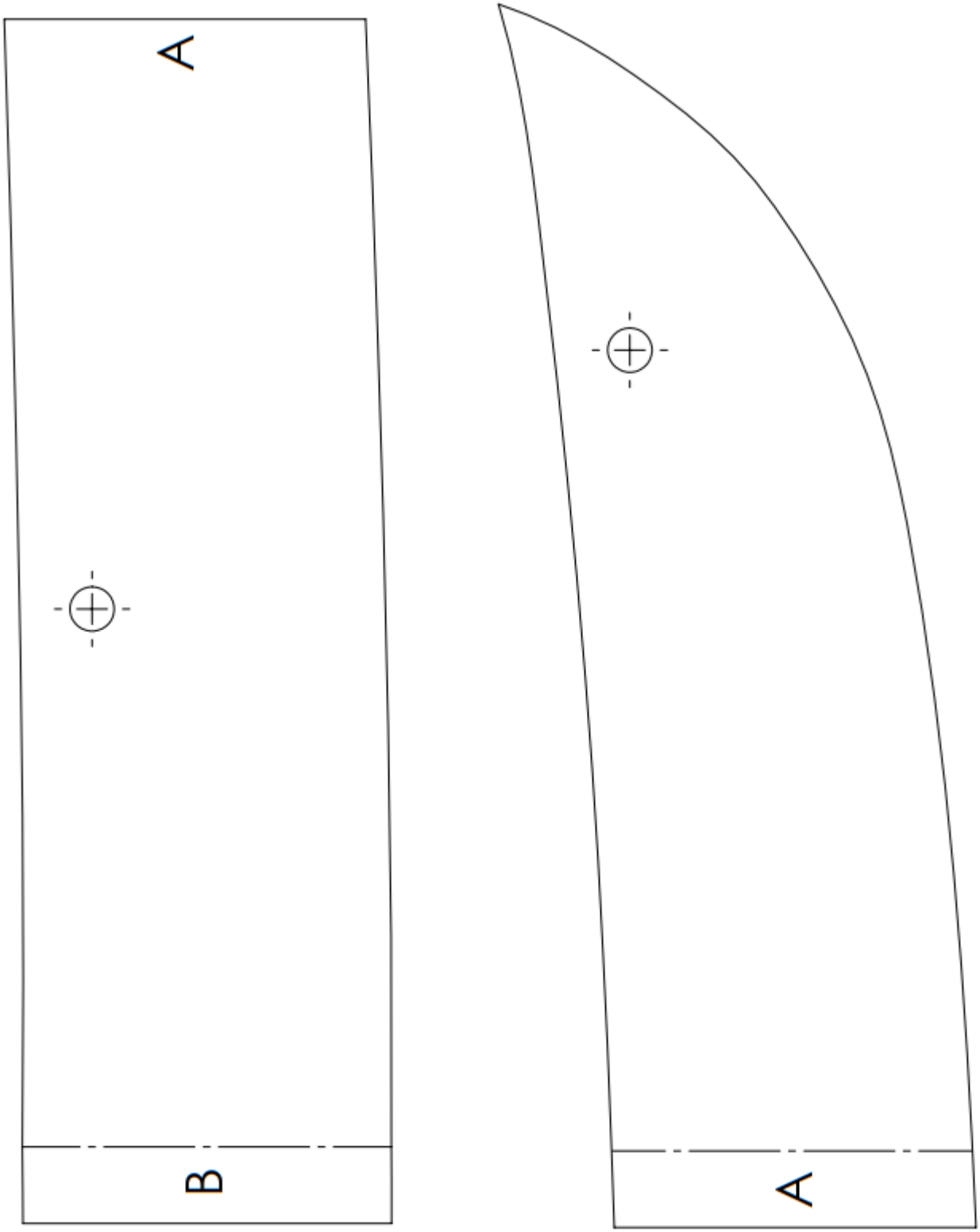

Template for trimming the center of the bumper - 2 of 2

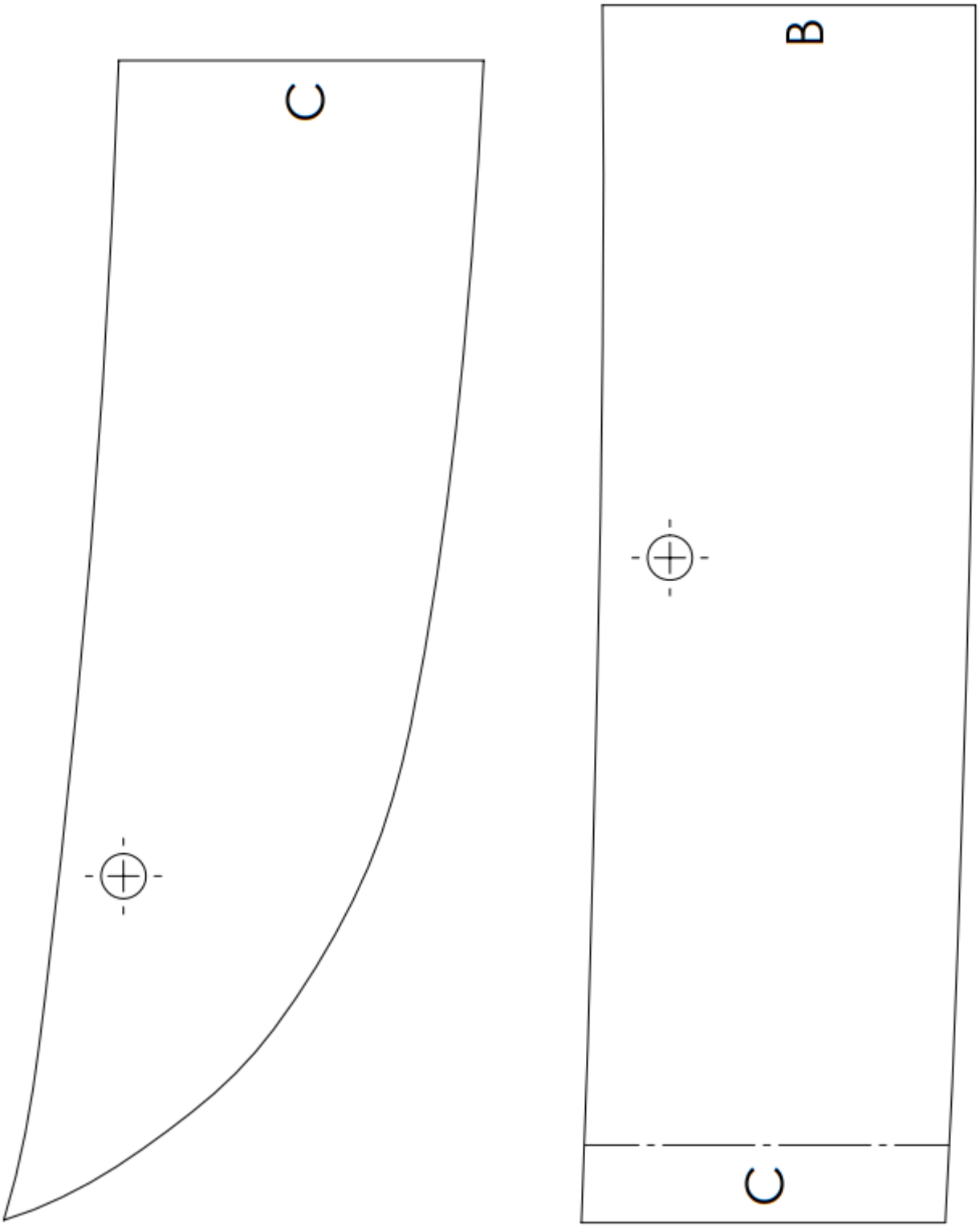

Template for trimming the outer ends of the bumper - 1 of 1

